# A PERSONAL TRITIUM MONITOR

Richard V. Osborne and Arthur S. Coveart

Health Physics Branch, Health Sciences Division,
Chalk River Nuclear Laboratories, Atomic Energy of
Canada Limited, Chalk River, Ontario, Canada

A tritium monitor, similar in size to a normal gamma survey meter, is being developed as part of the systematic approach to providing an improved capability for measuring tritiated water vapour (HTO) near workers in CANDU nuclear power plants. The prototype is shown in Fig. 1.

Tritium, formed by neutron capture in deuterium, is present in the reactor heavy water so that small vapour leakages may result in unexpected airborne contamination in some working areas. The requirement is for a quick indication of concentrations of tritiated water vapour

FIGURE 1. Prototype Personal Tritium Monitor

in air that are the order of one maximum permissible concentration and above, wherever a worker happens to be. Sensitive methods have already been developed for sampling [1] and for monitoring with a centrally-located instrument [2]. However, size, mass and cost are more important than sensitivity in an instrument that is designed to meet this requirement as opposed to a central monitor. Tritium monitors, even portable ones developed and described to date, have not been such that they can be available in large quantities. The instrument described here is intended to complement other monitoring methods by allowing on-the-spot assessments of tritium hazards and is designed to meet the severe constraints posed by the needs for portability and availability.

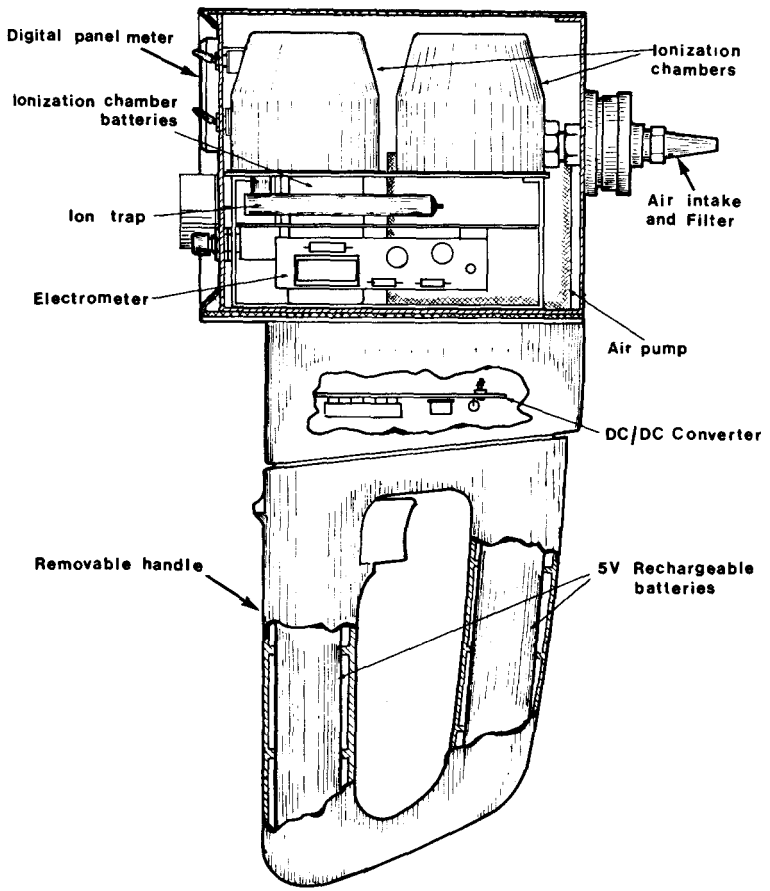


FIGURE 2. Mechanical assembly of the tritium monitor

As illustrated, the instrument is small enough to be easily handled and weighs only 2 kg. Only inexpensive, readily-obtainable mechanical and electrical components have been used in the instrument. Components need little machining and the assembly is uncomplicated.

The mechanical assembly is shown in Fig. 2. The tritium detector is an 80 $cm^3$ ionization chamber made from a nickel crucible (as used in chemical analyses) soldered to a fibre-glass printed circuit board on which guard rings and electrical connections have been etched and the copper nickel plated. No O-ring seals are used in the entire assembly which may be thrown away if it should be contaminated. Sample air is sucked through the molded plastic filter assembly and the cylindrical ion trap to the tritium ionization chamber by the loud-speaker coil-driven air pump [3]. A second ionization chamber, also 80 $cm^3$, is adjacent to the tritium chamber and, in the prototype shown, is sealed. The two ionization chambers are oppositely polarized so that the current from the sealed chamber partially cancels the background current in the tritium chamber caused by ambient gamma radiation. The electronics, on a 3 cm x 7 cm printed circuit board, are mounted under the ionization chamber assembly. The chamber and electronics can be removed as a single package for maintenance or replacement. The power supply is an inexpensive power handle, as sold for portable tools [4], that includes a rechargeable nickel-cadmium cell. The required voltages are derived in the DC/DC converter mounted in the mating assembly to the power handle to which the instrument is attached. The power handle may be detached for recharging whilst other handles are used. The switch on the power handle may be used to control intermittent operation of the pump.

The electrical schematic is outlined in block form in Fig. 3. The 4.2 V battery in the power handle drives the air pump directly and is converted to 5.6 V and 10 V for the electrometer and digital display meter. As shown, the major current drain from the power handle is the air pump. The battery lifetime with the current drain shown is about 5 hours. If an external (hand-operated) air pump is used then the battery lifetime is an order of magnitude longer.

The MOSFET input stage (3N155As, connected differentially as source followers) and one amplifier of a quad-amplifier DIP, LM324, comprise an operational amplifier with high input impedence and an effective feedback resistance of 4 TΩ. A smoothing circuit may be switched into the output stage to lengthen the electronic response time constant from less than one second to 3.3 seconds. The controls shown are on the monitor front panel; three additional positions on the slow/fast switch allow the battery voltages to be monitored.

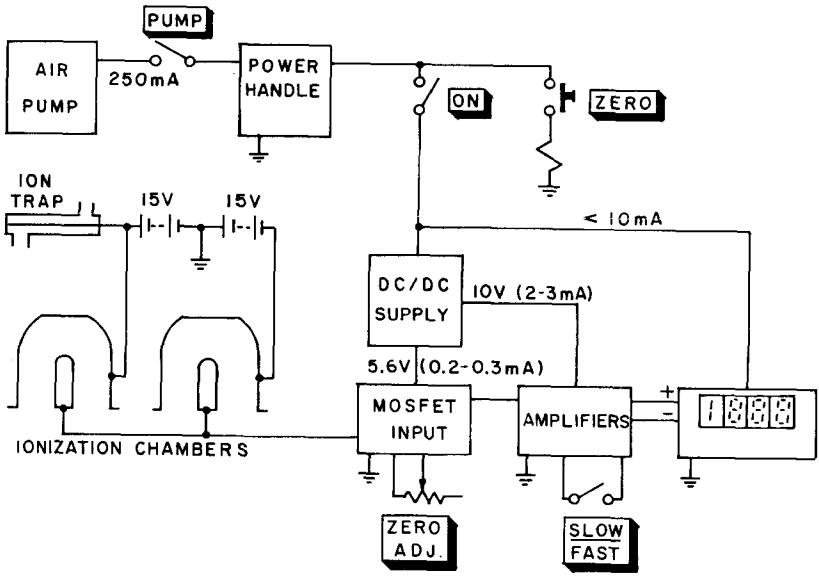


FIGURE 3. Block diagram of the electrical schematic of the tritium monitor

The sensitivity of the ionization chamber/amplifier combination is 3.2 mV/$(MPC)_a$. (The $(MPC)_a$ used is 10 $\mu Ci/m^3$ [0.37 $MBq/m^3$]). The input to the 3½ digit meter is scaled to give an output range from 1 to 1999 $(MPC)_a$.

REFERENCES

1. Osborne, R.V., "Sampling for tritiated water vapour", Proceedings, Third International Congress of IRPA (Washington, D.C., 1973) 2 1428.
2. Osborne, R.V., Central tritium monitor for CANDU nuclear power stations, IEEE Trans, Nucl. Sci, NS 22 (1975) 676.
3. Spectrex Corp., Redwood City, California 94063, USA.
4. Black and Decker Inc.